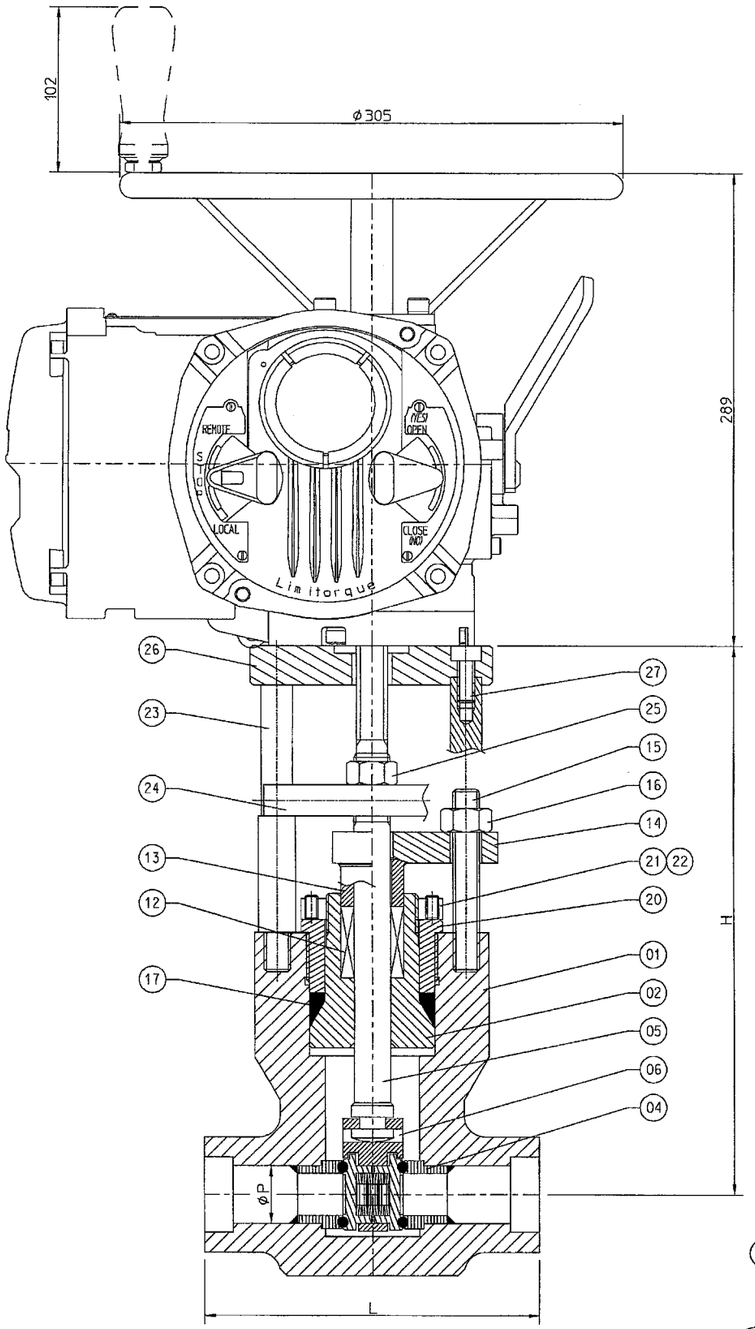

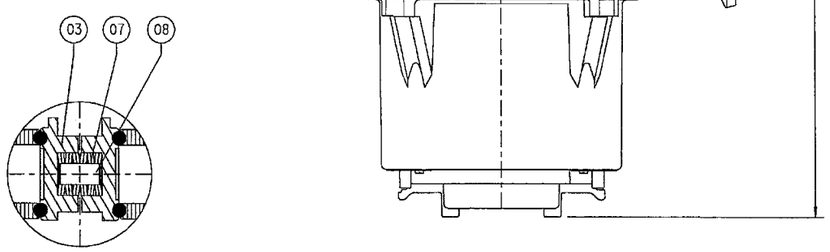

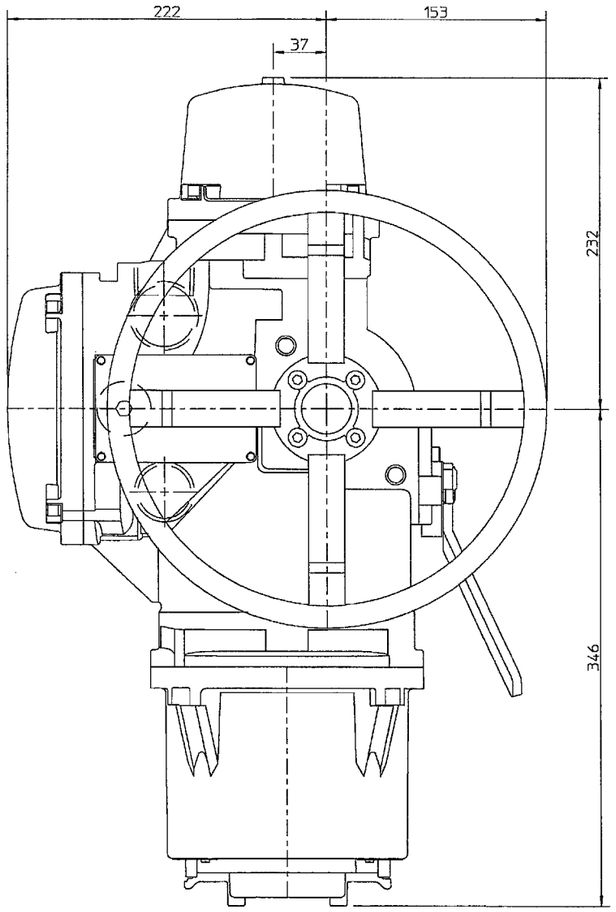

ACTUATOR TOPVIEW

ITEM	QTY	DESCRIPTION		MATERIAL
1	1	BODY	КОРПУС	ASTM A105 / SA105N
2	1	BONNET	КОЛПАЧОК	ASTM A105 / SA105N
3	2	DISC	ДИСК	13Cr / STELLITED
4	2	SEAT	СЕДЛО	13Cr / STELLITED
5	1	STEM	ШТОК	A276 410
6	1	DISC HOLDER	ДЕРЖАТЕЛЬ ДИСКА	A351 CF3M
7	SET	BELLEVILLES SPRING	пружины диска	INCONEL 718
8	1	PIN	ШПИЛЬКА	A276 316
12	1	PACKING	НАБИВКА ШТОКА	GRAPHITE
13	1	GLAND	САЛЬНИК	A276 304
14	1	GLAND FLANGE	ФЛАНЕЦ САЛЬНИКА	A105
15	2	GLAND BOLT	БОЛТ САЛЬНИКА	A193 B7
16	2	GLAND NUT	ГАЙКА САЛЬНИКА	A194 2H
17	2	GASKET	ПРОКЛАДКА	GRAPHITE
20	1	GUIDE FLANGE	направляющей фланец	A276 410
21	1	LOCK NUT	ГАЙКА	A276 304
22	4	BOLT	БОЛТ	A193 B8
23	4	YOKE BAR	распорных втулок	CARBON STEEL
24	1	GUIDE	направляющей	CARBON STEEL
25	1	NUT	ГАЙКА	CARBON STEEL
26	1	YOKE FLANGE	ФЛАНЕЦ ХОМУТА	CARBON STEEL
27	1	BOLT	БОЛТ	A193 B7
28	1	ELECTRIC ACTUATOR	ЭЛЕКТРИЧЕСКИМ ПРИВОДОМ	MAKE: LIMITORQUE TYPE: MX05-A

MAIN DIMENSIONS IN MM.

ITEM NR.	NOM. SIZE	H	L	P	WEIGHT
172	50MM	361	203	45	52 KG.

MAIN DIMENSIONS IN INCHES

NOM. SIZE	H	L	P	WEIGHT
2"	14.2	8	1.8	114.6 LBS

HP VALVES REF.	: 20100006
APPROVAL	:
PROJECT REFERENCE	: YAJVINSKAYA CCPP
CLIENT P/O NO	: 203/2010/900588
CLIENT	: CMI

HP VALVES
P.O. Box 151
7570 AD Oldenzaal
The Netherlands
Tel +31 (0)541 519555
www.hpvalves.com
info@hpvalves.com

REQ. NUMBER: 239172

TAG NR.	DESIGN PRESS. BAR (G)	DESIGN TEMP. °C
15HAH50AA145	34	242.5

PRESSURE TESTING	ACC. ASME B16.34
VALVE DESIGN	ACC. ASME B16.34
END CONN.	SW SCHED.80 ACC. ASME B16.11
HP FIG. NR.	KJPX50AGBA
COATING SYSTEM	1 LAYER HEMPEL SILICONE ZINC 16900

IZM. REV.	DATA DATE	OPISANIE DESCRIPTION	NACERCENO DRN.	RAZR. STR.	PROVER. CHK.	UTVER. APP.
A	03.02.2010	FIRST ISSUE.	R.T.B		R.K	

ЧЕТВЕРТАЯ ГЕНЕРИРУЮЩАЯ КОМПАНИЯ ОПТОВОГО РЫНКА ЭЛЕКТРОЭНЕРГИИ

ENKA Power Systems B.V.

`YVINSKA` GR_S

YAJVA STATE DISTRICT POWER PLANT

TITLE: FORGED STEEL PARALLEL SLIDE GATE VALVE
PRESSURE CLASS: 900 LBS
NOM SIZE: 2"

STATUS	REVISIONS
PRELIMINARY	
FOR LAYOUT	
FOR CONSTRUCTION	A
FOR CONSTRUCTION EXCEPT HOLD	
AS BUILT	

E/01/161031
ORDER N°

	Name	Signature
Engineer	LEVAUX	
Checker	R.K	
Draftman	R.t.B	

Destination
YAJVA STATE DISTRICT POWER PLANT

Designation
IP DRUM TO IP SUPERHEATER DRAIN ISOLATION VALVE

N° Draw 66094/23172/2

Scale | Sheet: 1 / 1

This drawing and the design it covers are the property of C.M.I. They are merely loaned on the borrower's express agreement that they will not be reproduced, copied, loaned, exhibited or used except in the limited way of and private use permitted by any written consent given by C.M.I to the borrower.